		Reference :	9806J-0510-DW-4257-00101
		Doc item nb :	A2001 – A4210 – A2006

Document title°:

SECONDARY AND TERTIARY SCREENS

General Arrangement Drawings

SECONDARY AND TERTIARY SCREENS
GENERAL ARRANGEMENT DRAWINGS
510-SN-1010
510-SN-1110
510-SN-2010
510-SN-2110
510-SN-2210
510-SN-2310

SUMMARY

DOCUMENT PAGE DESCRIPTION	p
Summary	1
Dimensions / lifting – screen only	1
Dimensions / lifting – isolation frame	1
Dimension / anchor - assembly	1
Dust encapsulation	1
Trellex sealing details	1
3D views of screens	4

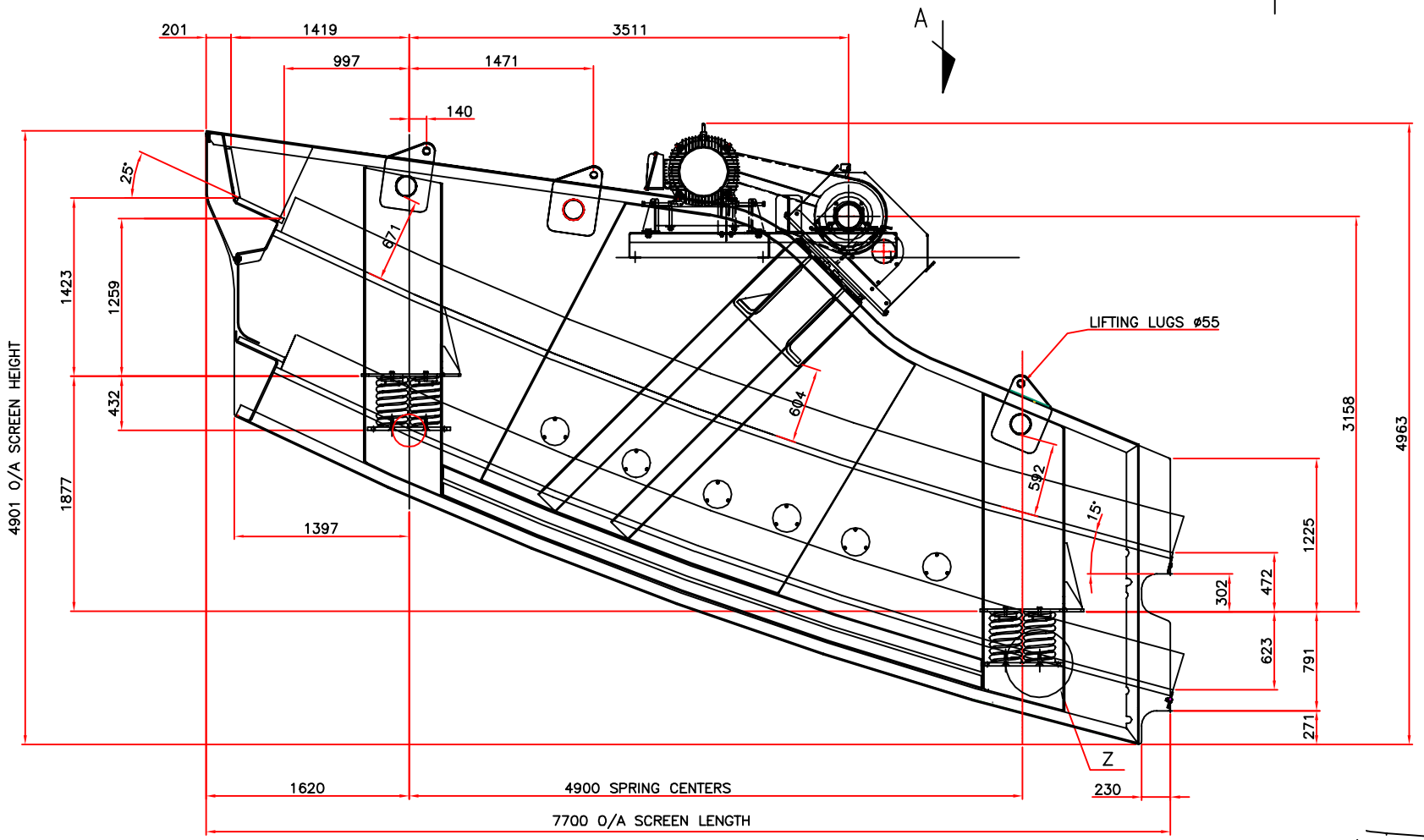

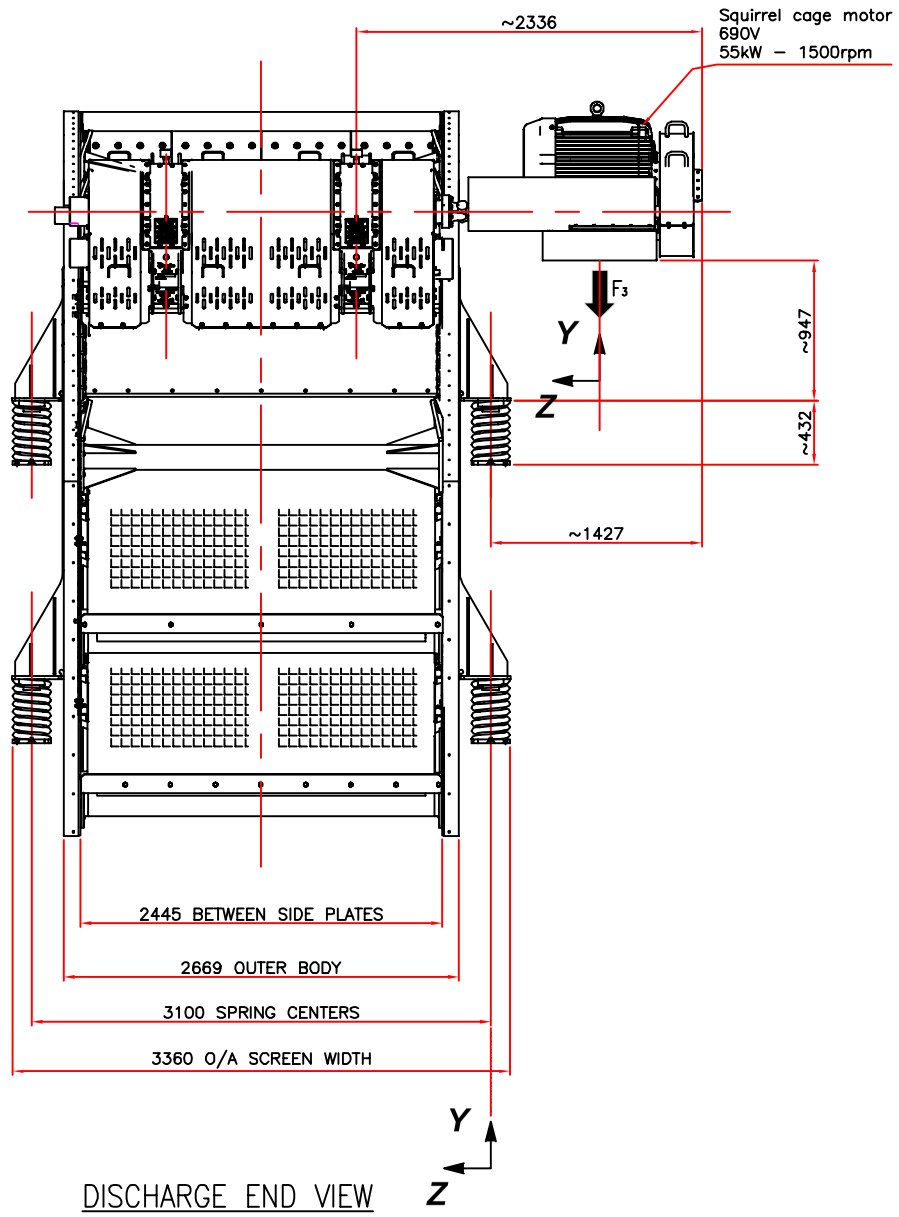

DISCHARGE END VIEW

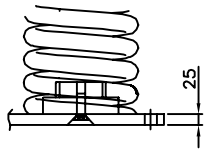

DETAIL 'Z'

SCALE: NTS

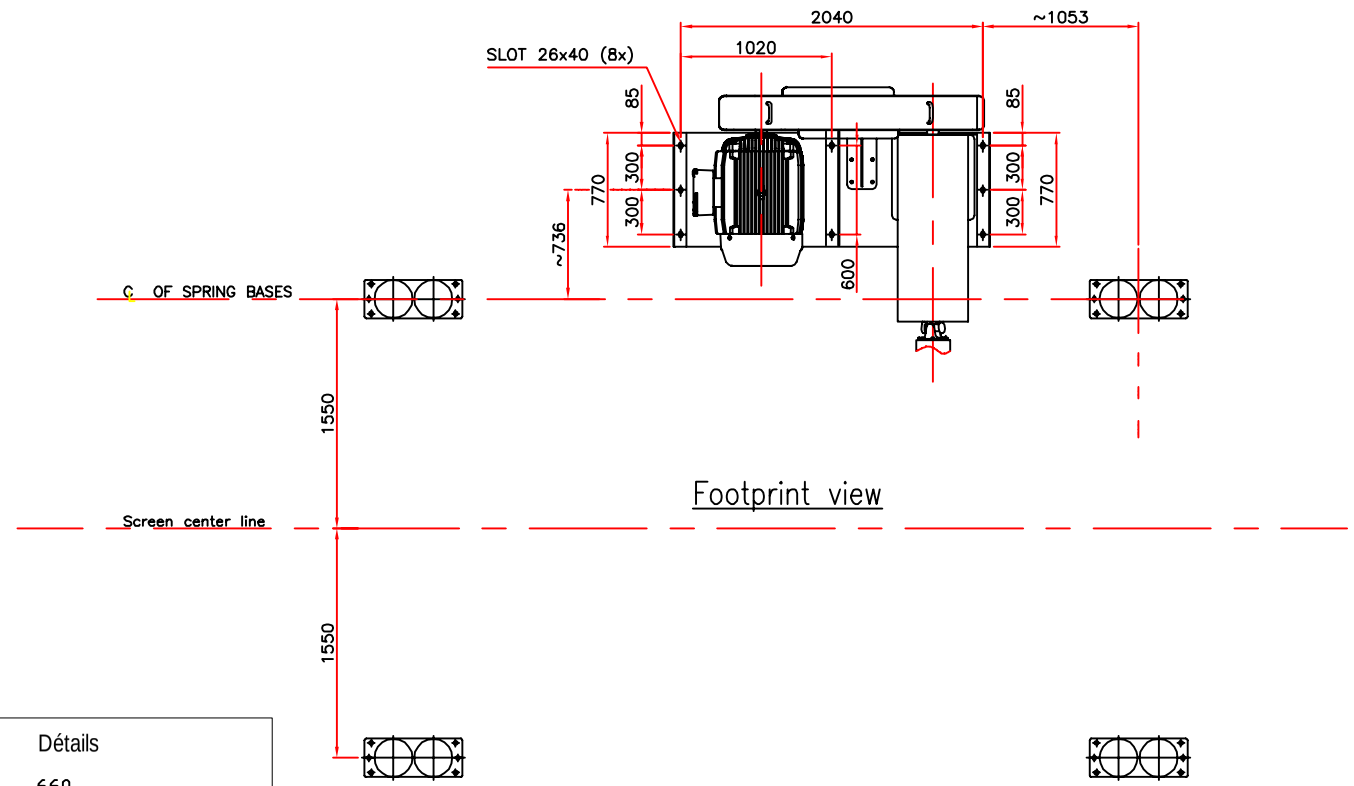

Footprint view

NOTES:

1) MATERIAL FEED NEEDS TO BE EVENLY DISTRIBUTED EITHER SIDE OF THE FEEDBOX CENTRELINE AT NO LESS THAN 75% OF THE FEEDBOX WIDTH AT A CONTINUOUS RATE.
2) MATERIAL FREE FALL NEEDS TO BE MINIMISED (AT AROUND 760mm) BY USE OF APPROPRIATE FEEDER OR LINED CHUTE/ROCK BOX.
3) DISCHARGE CHUTES SHALL BE DESIGNED TO NOT ALLOW MATERIAL BUILD-UP.
4) ELECTRIC BRAKE SYSTEM CAN BE APPLIED TO THIS MACHINE.
5) ALL LOAD CALCULATIONS ARE WITHOUT MATERIAL.
6) ANCHOR BOLTS ARE NOT SUPPLIED WITH THIS MACHINE.
7) SPRINGS DIMENSIONED UNDER STATIC MACHINE LOAD ONLY
8) BUILDING VIBRATION MUST BE LESS THAN 15mm/s.
9) THE TWO CENTER HOLES ARE AVAILABLE TO USE ON CONCRETE BASES, CAN BE NOT USED THE OTHER HOLES IN THIS CASE.

Total weight of screen without drive: 24000kg

	Screen	
	Secondary	Tertiary
1st deck	50X50 Rubber T60	25x25 Rubber T60
2nd deck	12.5x27.5 Rubber T60	12.5x27.5 Rubber T60

Items: 510-SN-1010
510-SN-1110
510-SN-2010
510-SN-2110
510-SN-2210
510-SN-2310

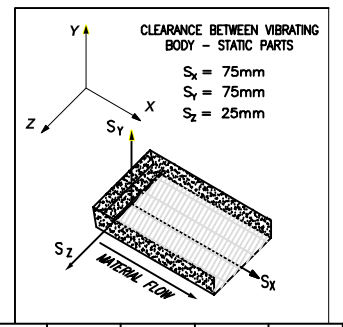

Détails

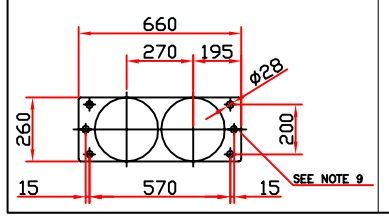

metso	Dimensions / lifting – Screen only	Rev: I
	Doc. Type: General arrangement drawings	Page: 3
	Document Reference: –MF2473–A2001–001	

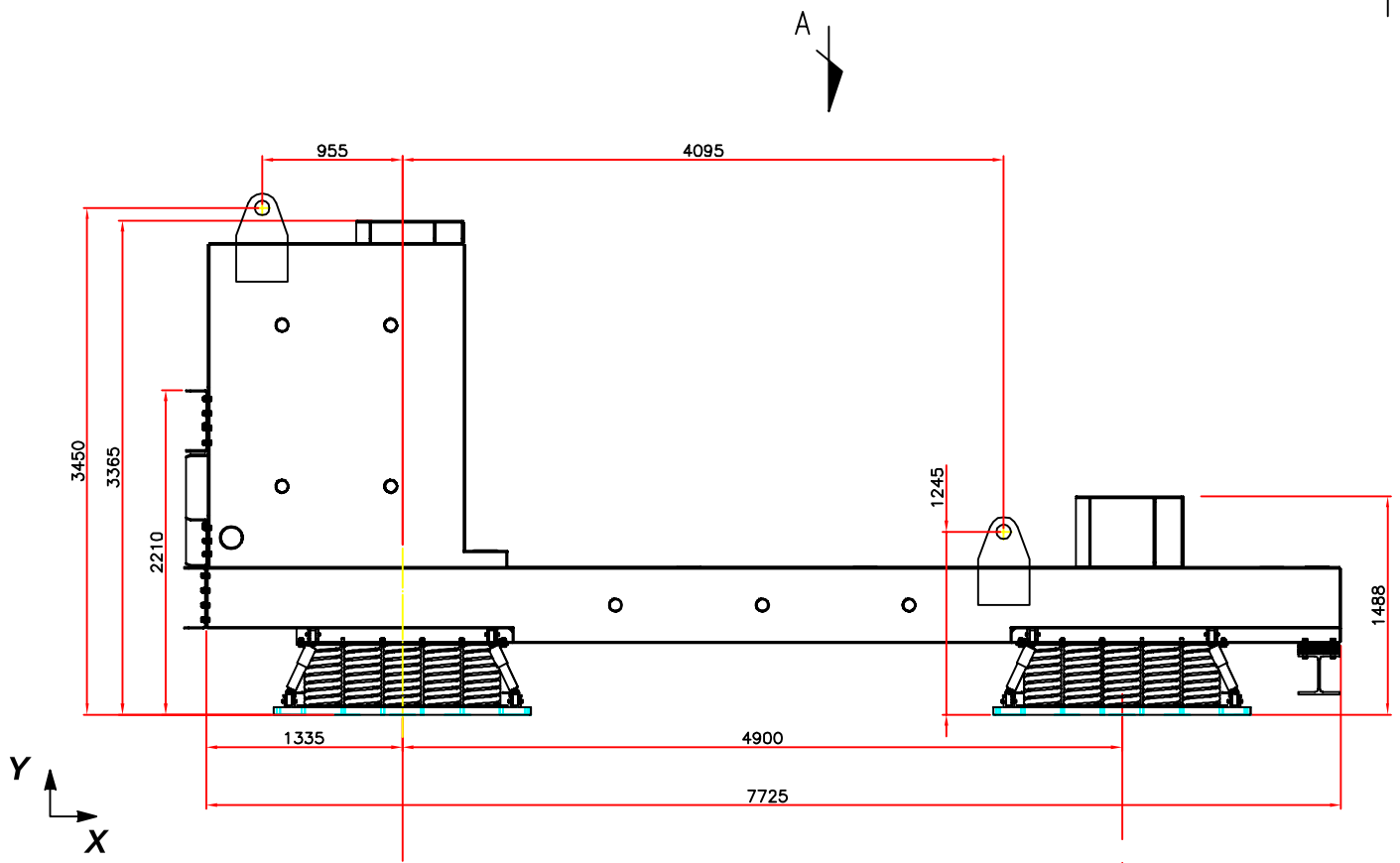

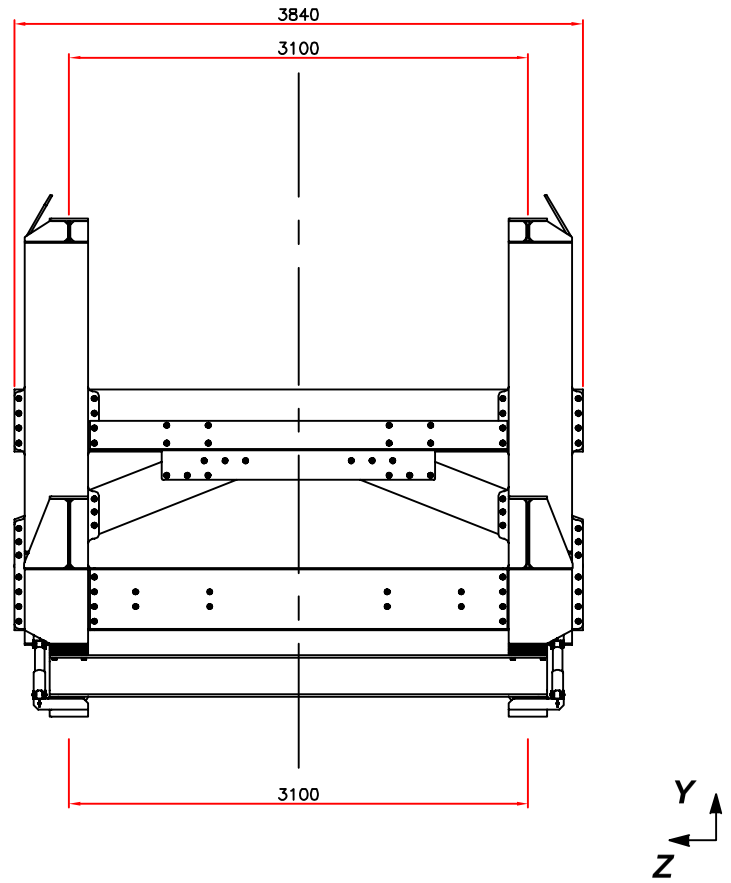

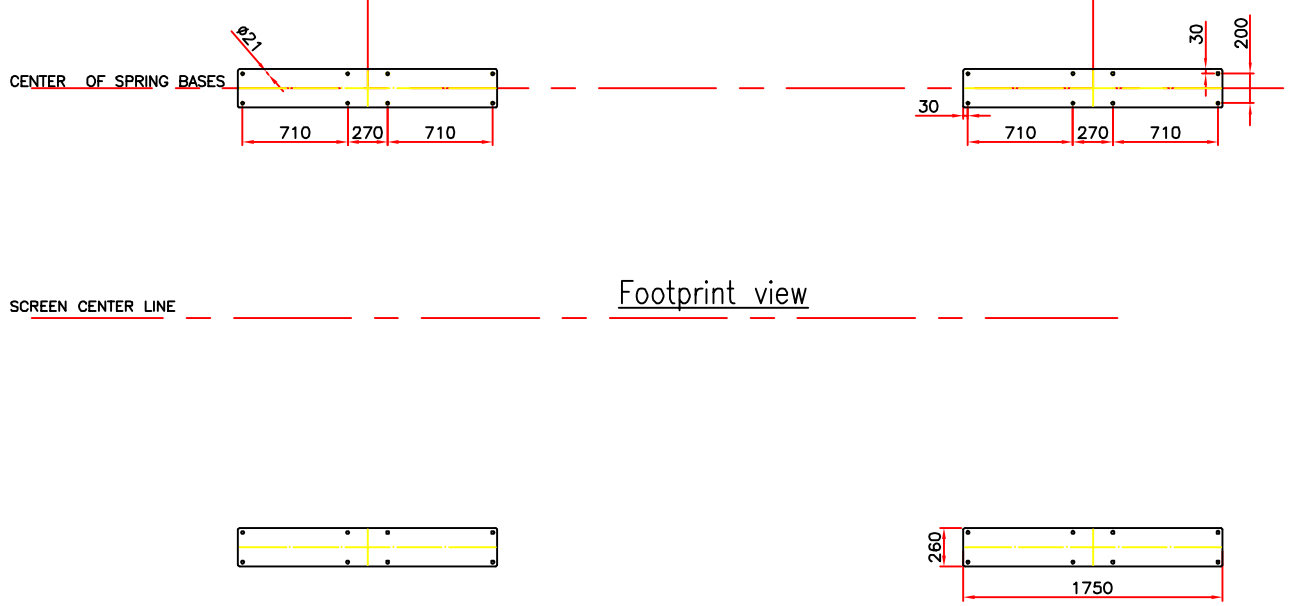

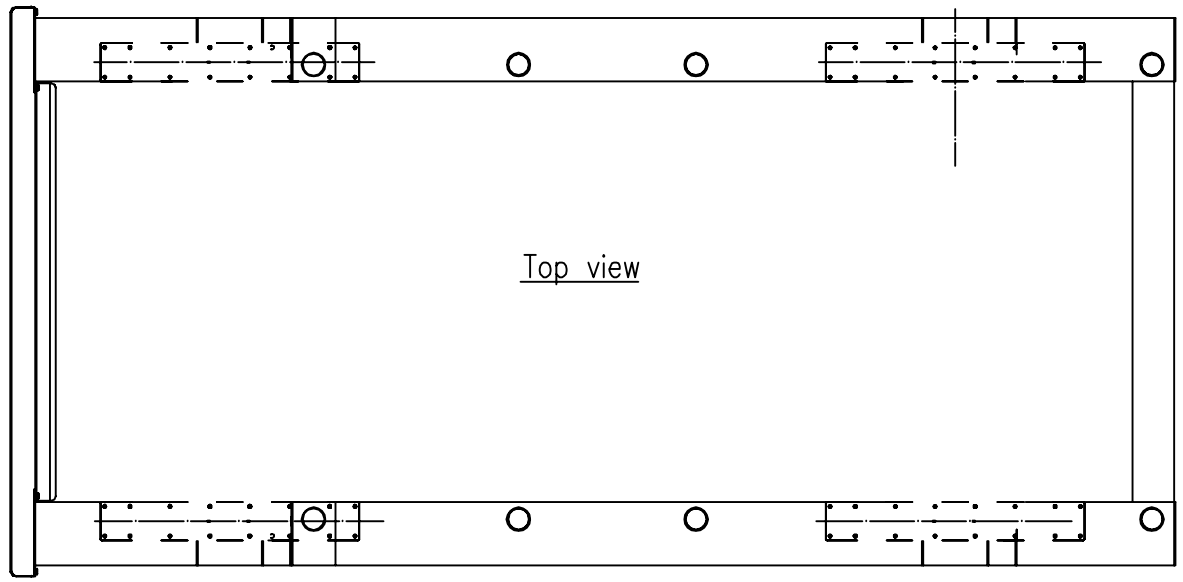

NOTES:
1) ANCHOR BOLTS (M18, CLASS 8.8) ARE NOT SUPPLIED WITH THIS MACHINE.
2) SPRINGS DIMENSIONED UNDER STATIC MACHINE LOAD ONLY
3) BUILDING VIBRATION MUST BE LESS THAN 15mm/s.

Total weight of isolation frame: 10000kg

Items: 510-SN-1010
510-SN-1110
510-SN-2010
510-SN-2110
510-SN-2210
510-SN-2310

metso	Lifting – Isolation frame	Rev: I
	Doc. Type: General arrangement drawings	Page: 4
	Document Reference: MF2473–A2001–001	

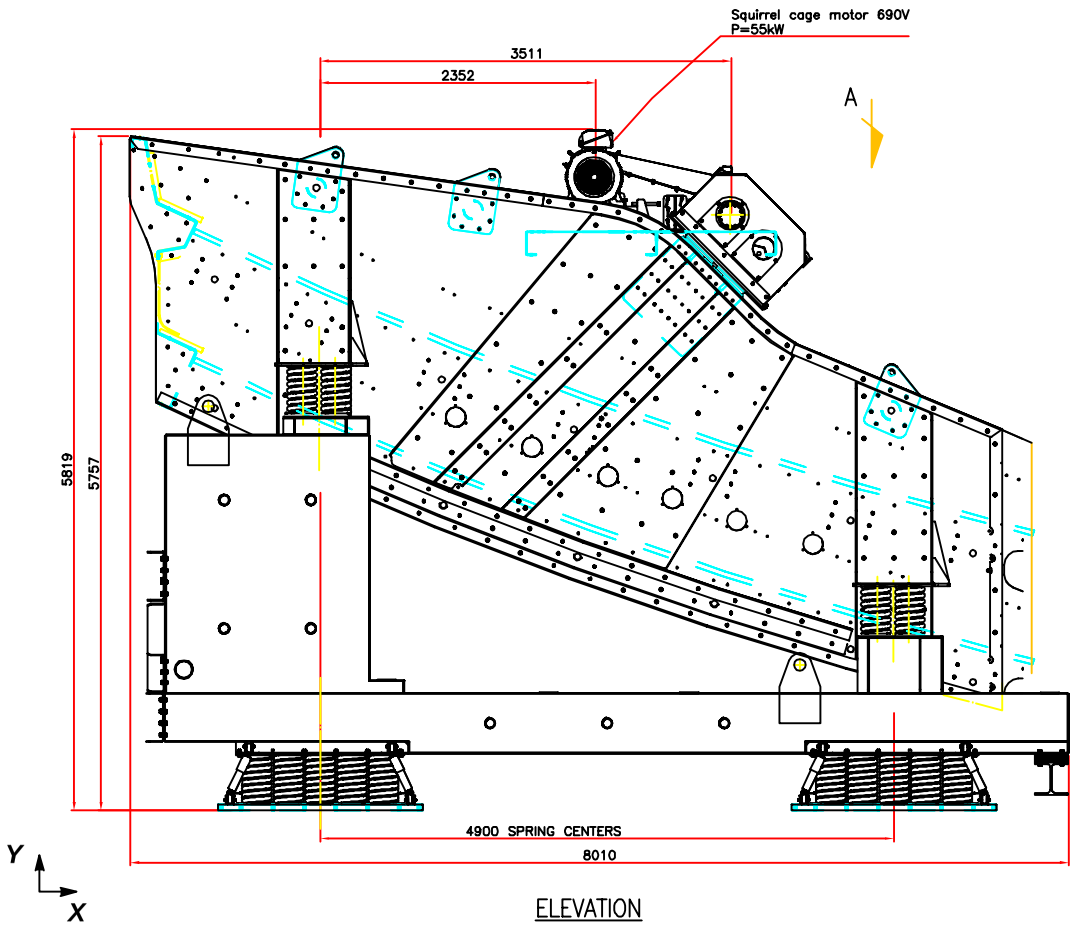

ELEVATION

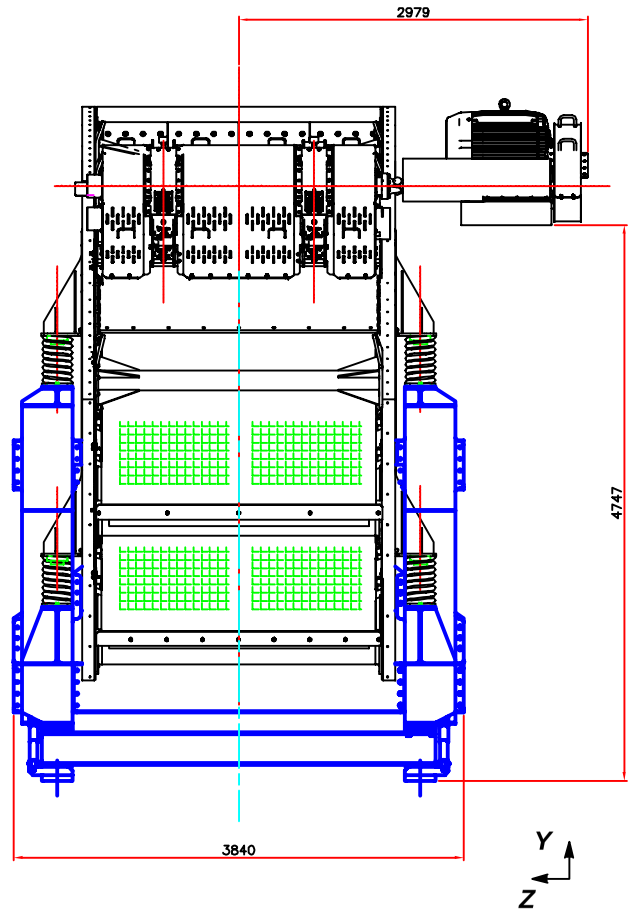

DISCHARGE END VIEW

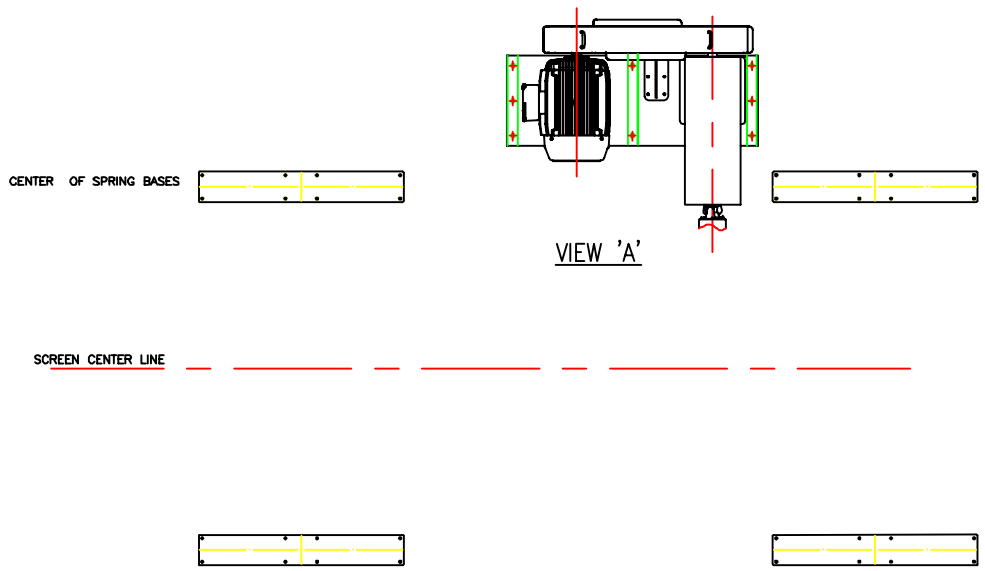

VIEW 'A'

NOTES:

1) MATERIAL FEED NEEDS TO BE EVENLY DISTRIBUTED EITHER SIDE OF THE FEEDBOX CENTRELINE AT NO LESS THAN 75% OF THE FEEDBOX WIDTH AT A CONTINUOUS RATE.
2) MATERIAL FREE FALL NEEDS TO BE MINIMISED (AT AROUND 760mm) BY USE OF APPROPRIATE FEEDER OR LINED CHUTE/ROCK BOX.
3) DISCHARGE CHUTES SHALL BE DESIGNED TO NOT ALLOW MATERIAL BUILD-UP.
4) ELECTRIC BRAKE SYSTEM CAN BE APPLIED TO THIS MACHINE.
5) ALL LOAD CALCULATIONS ARE WITHOUT MATERIAL.
6) ANCHOR BOLTS ARE NOT SUPPLIED WITH THIS MACHINE.
7) SPRINGS DIMENSIONED UNDER STATIC MACHINE LOAD ONLY
8) BUILDING VIBRATION MUST BE LESS THAN 15mm/s.

During maintenance operation, "the screen" OR "the screen + the isolation frame" can be lifted up to 200mm

Total weight of assembly: 34000kg

Items: 510-SN-1010
510-SN-1110
510-SN-2010
510-SN-2110
510-SN-2210
510-SN-2310

metso	Dimensions / Anchors – Assembly	Rev: I
	Doc. Type: General arrangement drawings	Page: 5
	Document Reference: MF2473–A2001–001	

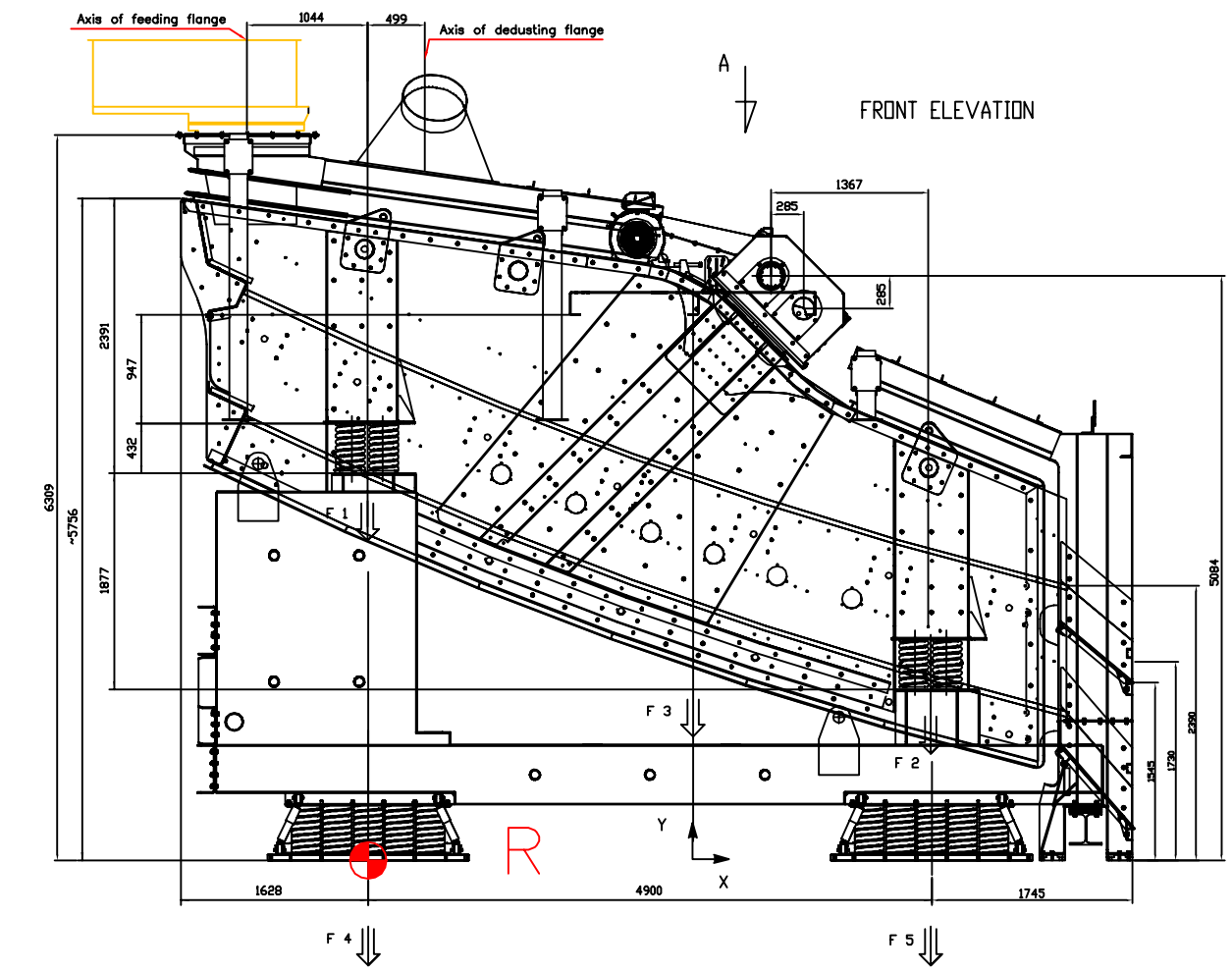

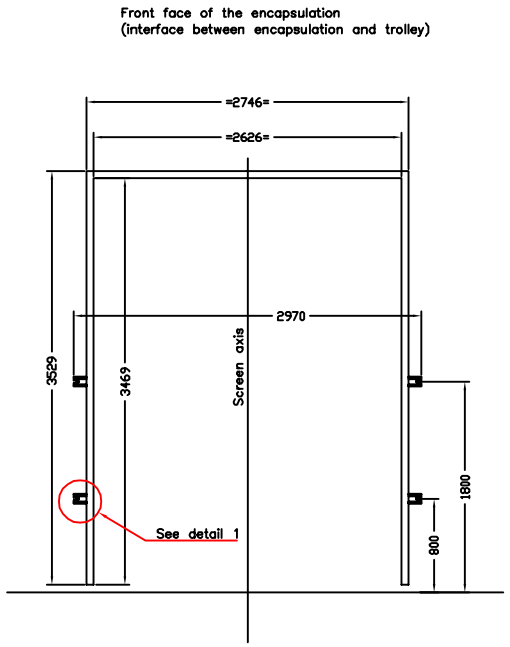

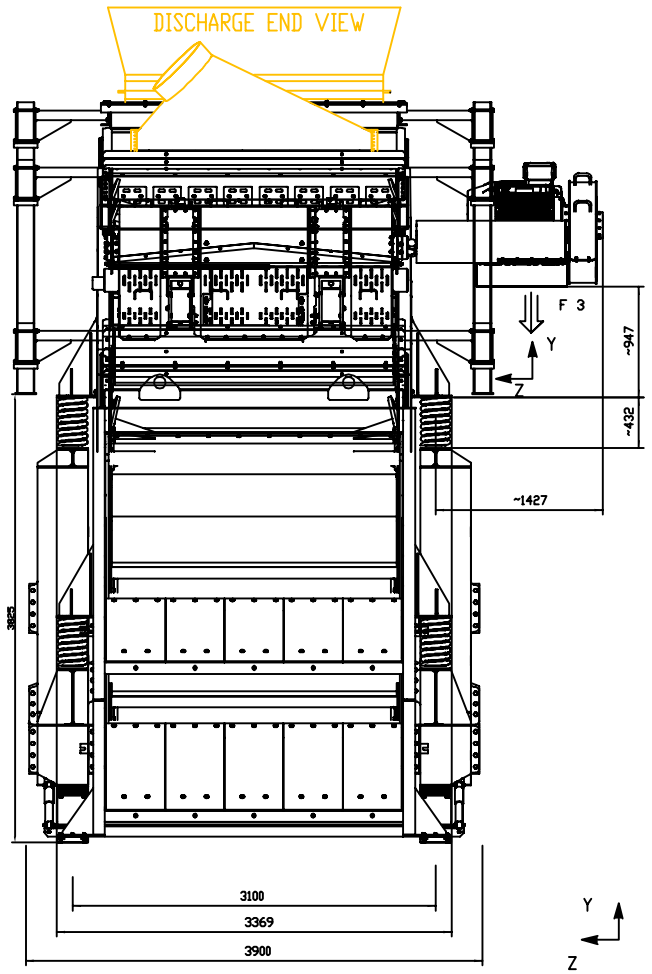

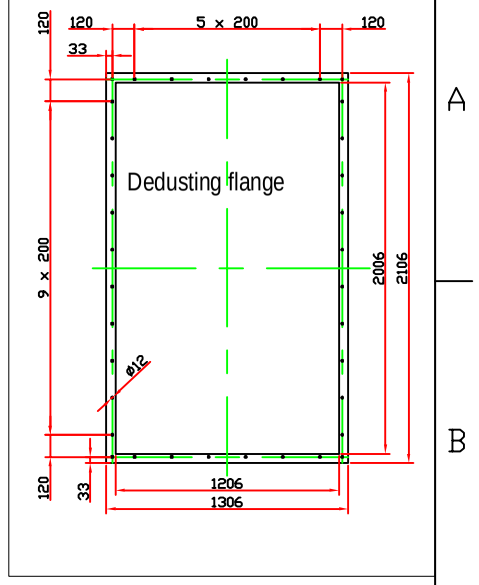

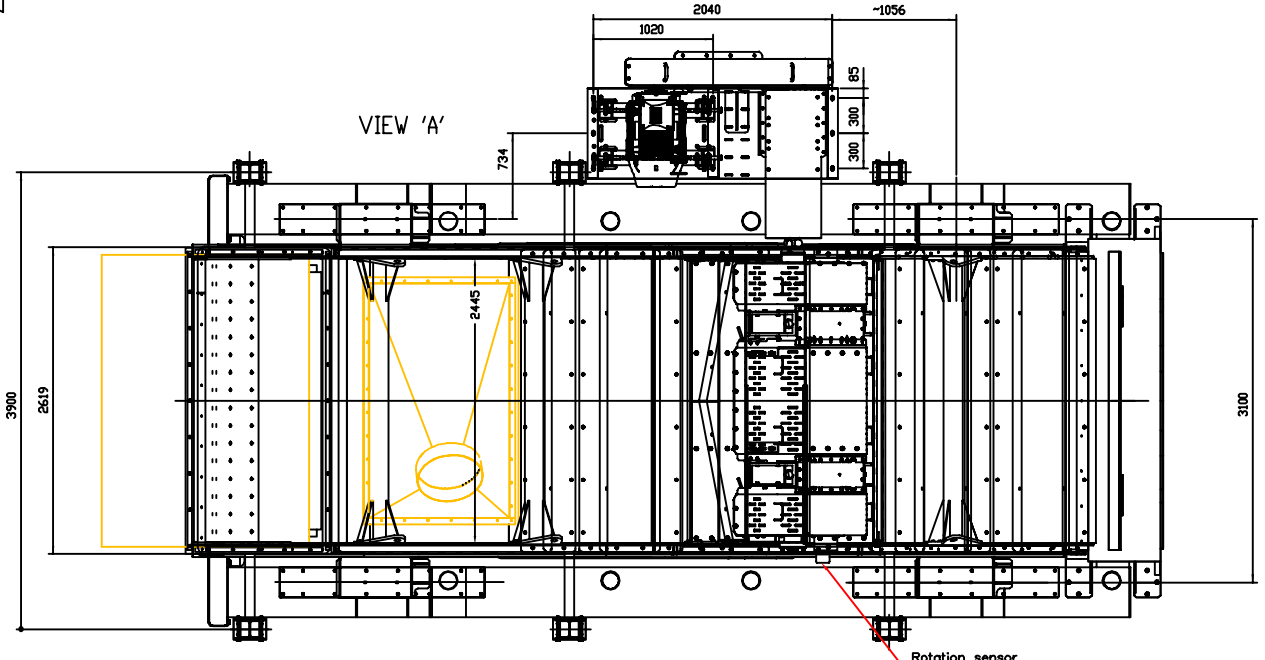

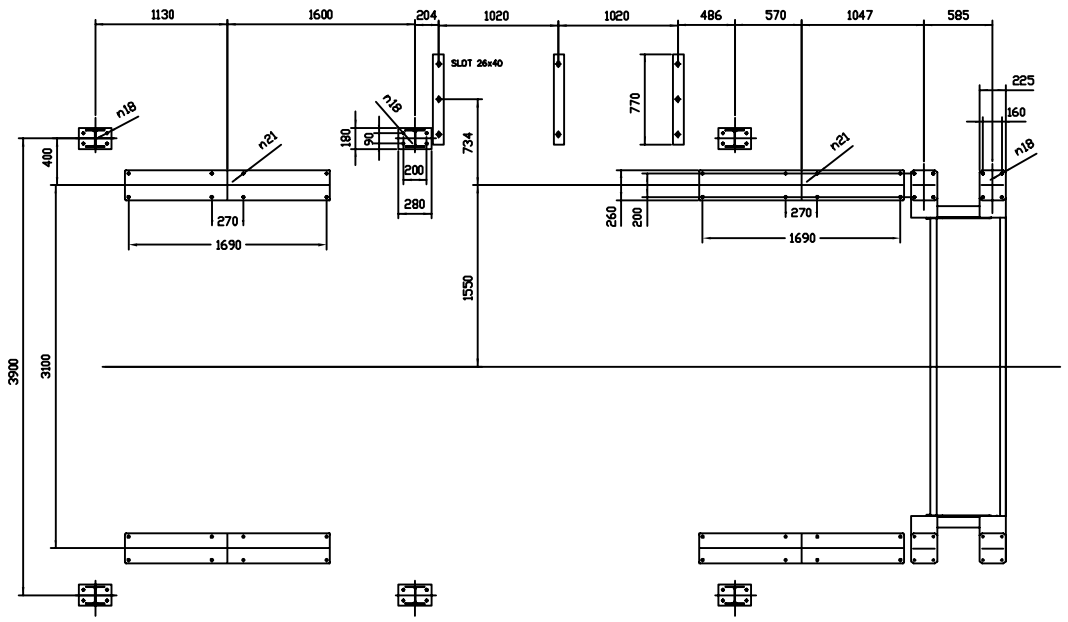

NOTES:

1) MATERIAL FEED NEEDS TO BE EVENLY DISTRIBUTED EITHER SIDE OF THE FEEDBOX CENTRELINE AT NO LESS THAN 75% OF THE FEEDBOX WIDTH AT A CONTINUOUS RATE.
2) MATERIAL FREE FALL NEEDS TO BE MINIMISED (AT AROUND 760mm) BY USE OF APPROPRIATE FEEDER OR LINED CHUTE/ROCK BOX.
3) DISCHARGE CHUTES SHALL BE DESIGNED TO NOT ALLOW MATERIAL BUILD-UP.
4) ELECTRIC BRAKE SYSTEM CAN BE APPLIED TO THIS MACHINE.
5) ALL LOAD CALCULATIONS ARE WITHOUT MATERIAL.
6) ANCHOR BOLTS ARE NOT SUPPLIED WITH THIS MACHINE.
7) SPRINGS DIMENSIONED UNDER STATIC MACHINE LOAD ONLY
8) BUILDING VIBRATION MUST BE LESS THAN 15mm/s.

SCREEN LOAD IN EACH SPRING BRACKET WITHOUT CONSIDER THE MATERIAL (N)

STATIC	DYNAMIC							
	IN OPERATION				IN THE STOPPING			
VERTICAL (Y)	VERTICAL (Y)	HORIZONTAL (X)	TRANSVERSAL (Z)		VERTICAL (Y)	HORIZONTAL (X)	TRANSVERSAL (Z)	
F1 ± = 60600	F1 = ± 3400	F1 = ± 1700	F1 = ± 340		F1 = ± 38100	F1 = ± 11500	F1 = ± 3810	
F2 ± = 59400	F2 = ± 3400	F2 = ± 1700	F2 = ± 340		F2 = ± 38100	F2 = ± 11500	F2 = ± 3810	
F3 = 11310								

TOTAL WEIGHT	± 39900	kg
LIVE WEIGHT WITH CLOTHS AND LINERS WITHOUT DRIVE	24000	kg
LIVE WEIGHT WITHOUT CLOTHS AND LINERS AND DRIVE	20540	kg
LIVE WEIGHT ISOLATION BASE	10900	kg
MOTOR CHARACTERISTICS 55kW 4 POLES	50	Hz
NOMINAL STROKE	±11,5	mm
OPERATION SPEED	750-950	rpm
WEIGHT DUSTENCAPSULATION	3000	kg

ISOLATION BASE LOAD IN EACH SPRING BRACKET WITHOUT CONSIDER THE MATERIAL WITHOUT DUST ENCAPSULATION (N)

STATIC	DYNAMIC			
	IN OPERATION		IN THE STOPPING	
VERTICAL	VERTICAL	HORIZONTAL	VERTICAL	HORIZONTAL
F4 = ± 104000	F4 = ± 780	F4 = ± 60	F4 = ± 48500	F4 = ± 15250
F5 = ± 71200	F5 = ± 600	F5 = ± 50	F5 = ± 43600	F5 = ± 13600

SPRING LOCATION DIAGRAM

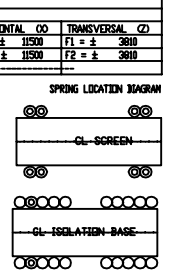

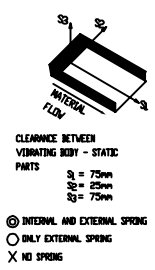

CLEARANCE BETWEEN VIBRATING BODY - STATIC PARTS
S_1 = 75mm
S_2 = 25mm
S_3 = 75mm

(O) INTERNAL AND EXTERNAL SPRING
(O) ONLY EXTERNAL SPRING
X NO SPRING

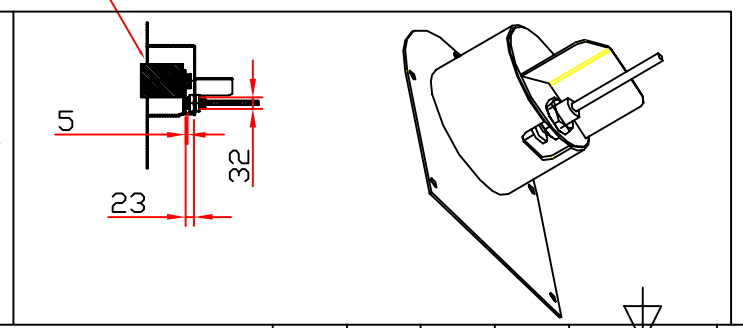

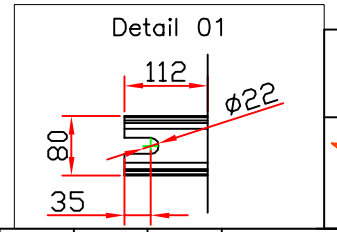

Items: 510-SN-1010
510-SN-1110
510-SN-2010
510-SN-2110
510-SN-2210
510-SN-2310

metso

Dust Encapsulation	Rev: 1
Doc. Type: General arrangement drawings	Page: 6
Document Reference: MF2473-A2001-001	

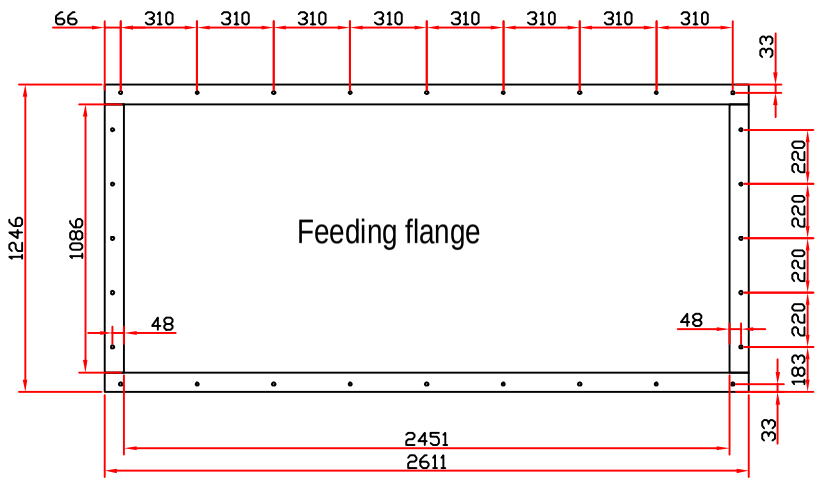

Detail 1:
- Angle chute and chute design only as suggestion
- Center distance of 2620 imperative

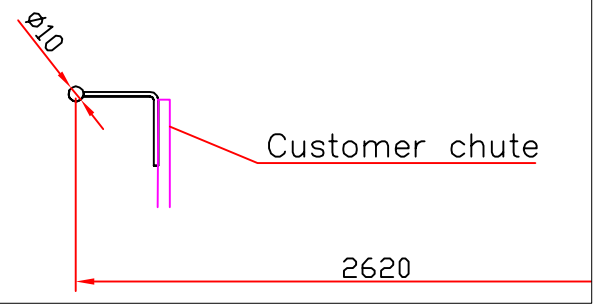

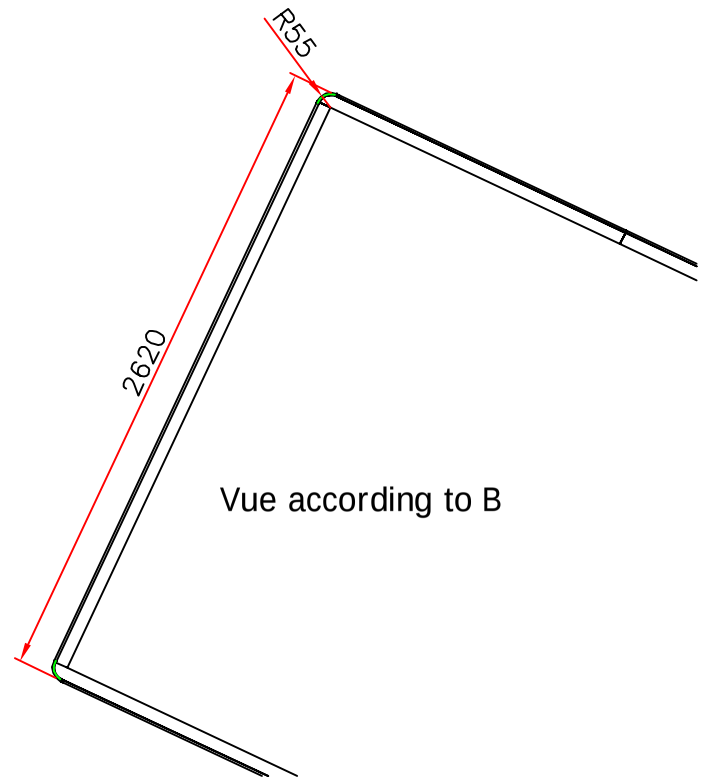

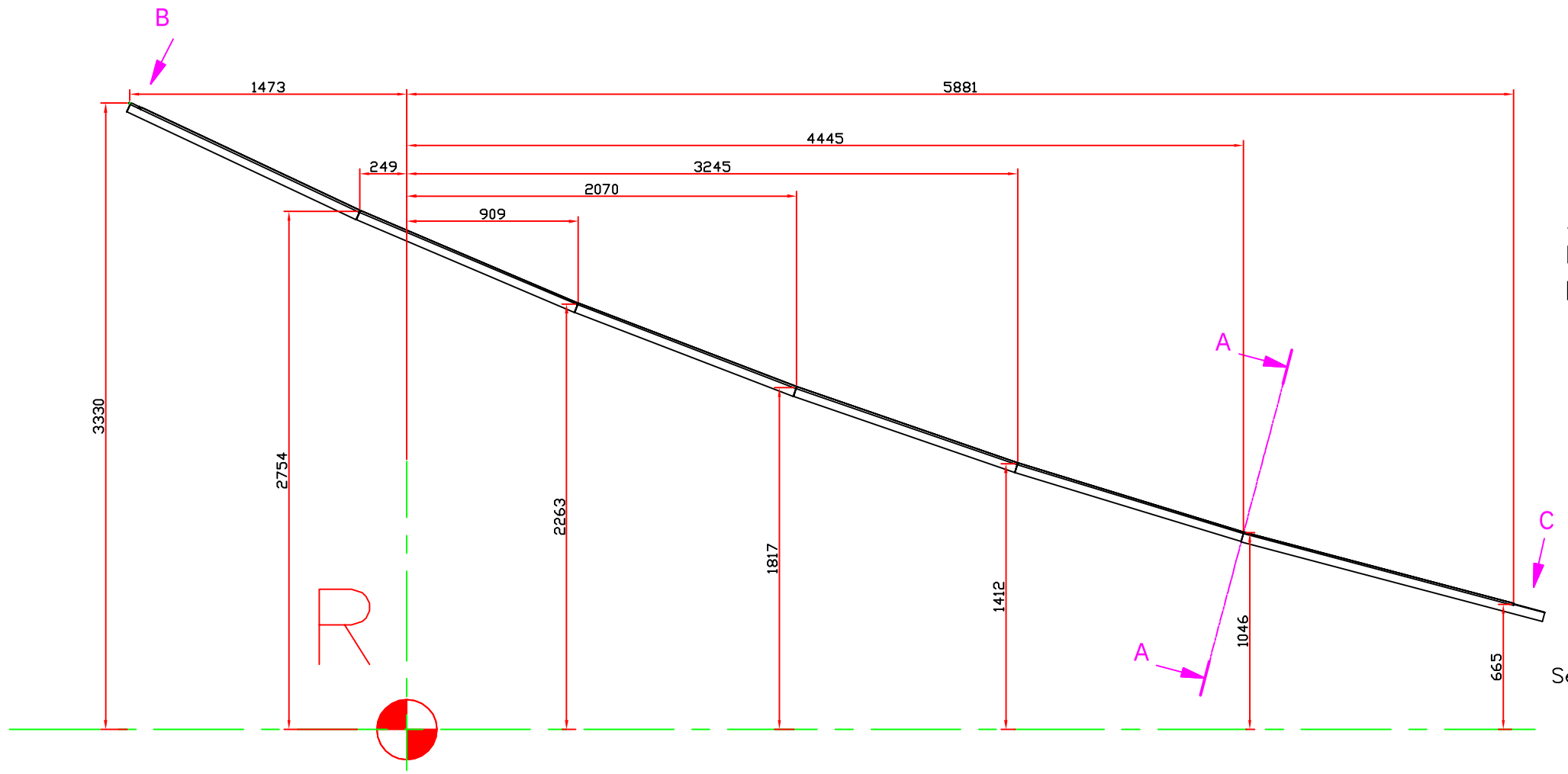

Sealing profile of the discharge chute (customer scope)
Reference R: Axis of the rear springs base plate (See page 5/6 on this document)

1/2 C-C

A-A (1 : 50)

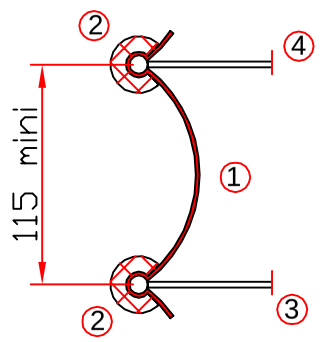

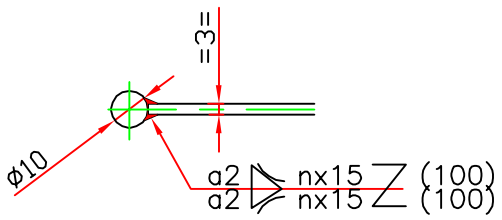

1 - Trellex canva - Metso scope
2 - Trellex molding - Metso scope
3 - Round sealing profile on screen or on cover - Metso scope
4 - Round sealing profile on discharge chute or feeding chute - TS

Items: 510-SN-1010
510-SN-1110
510-SN-2010
510-SN-2110
510-SN-2210
510-SN-2310

metso	Trellex sealing details	Rev: I
	Doc. Type: General arrangement drawings	Page: 7
	Document Reference: MF2473-A2001-001	
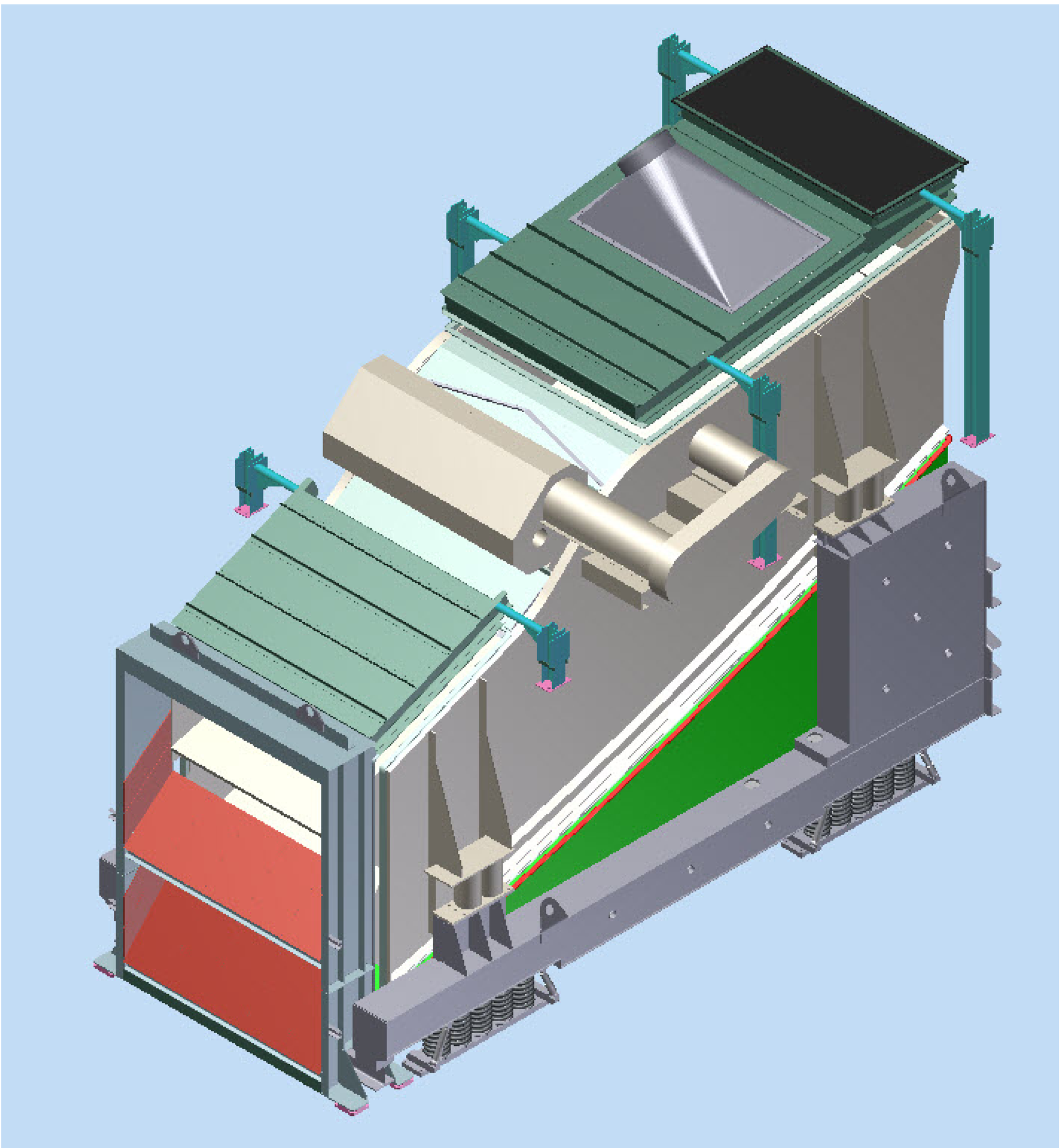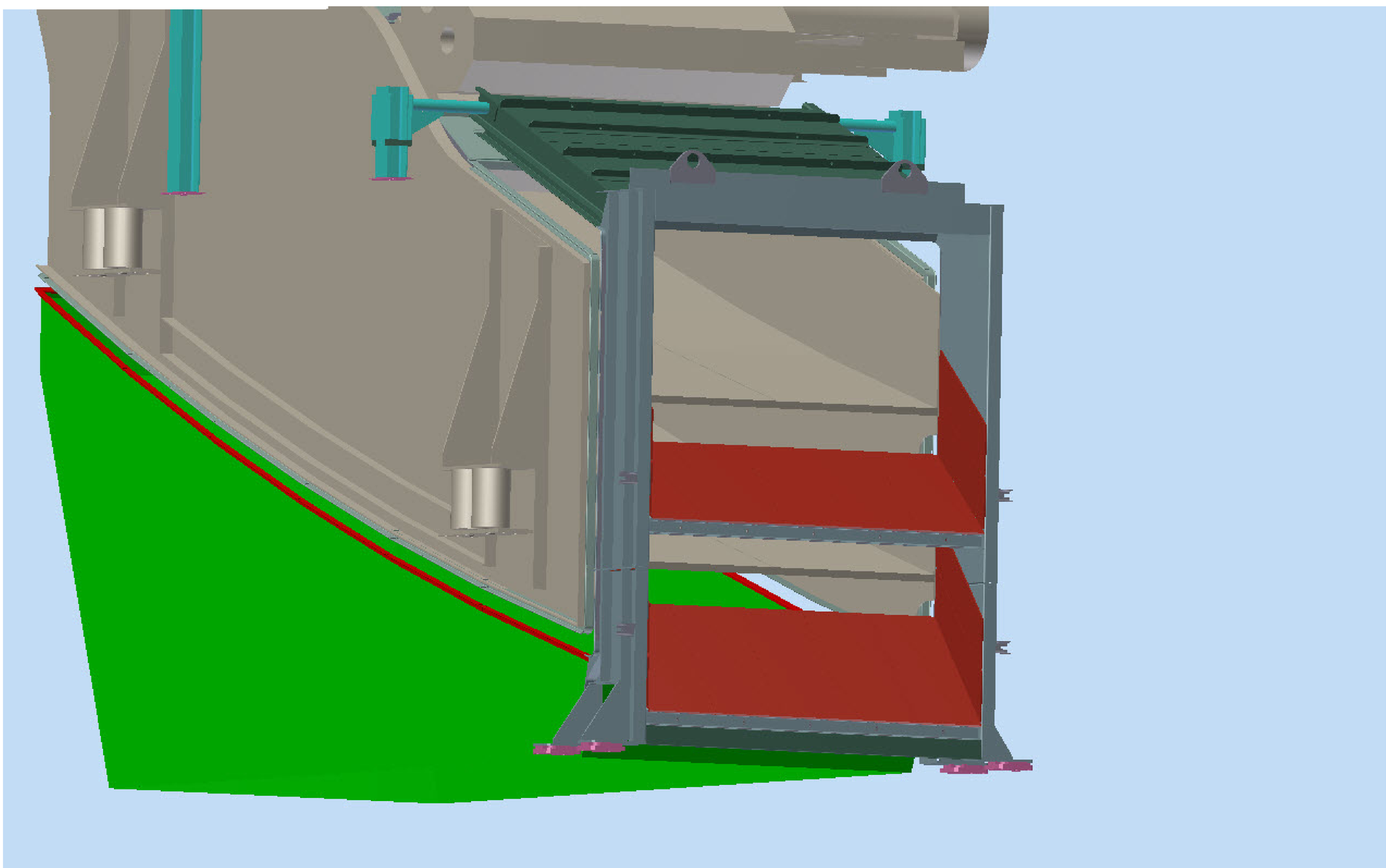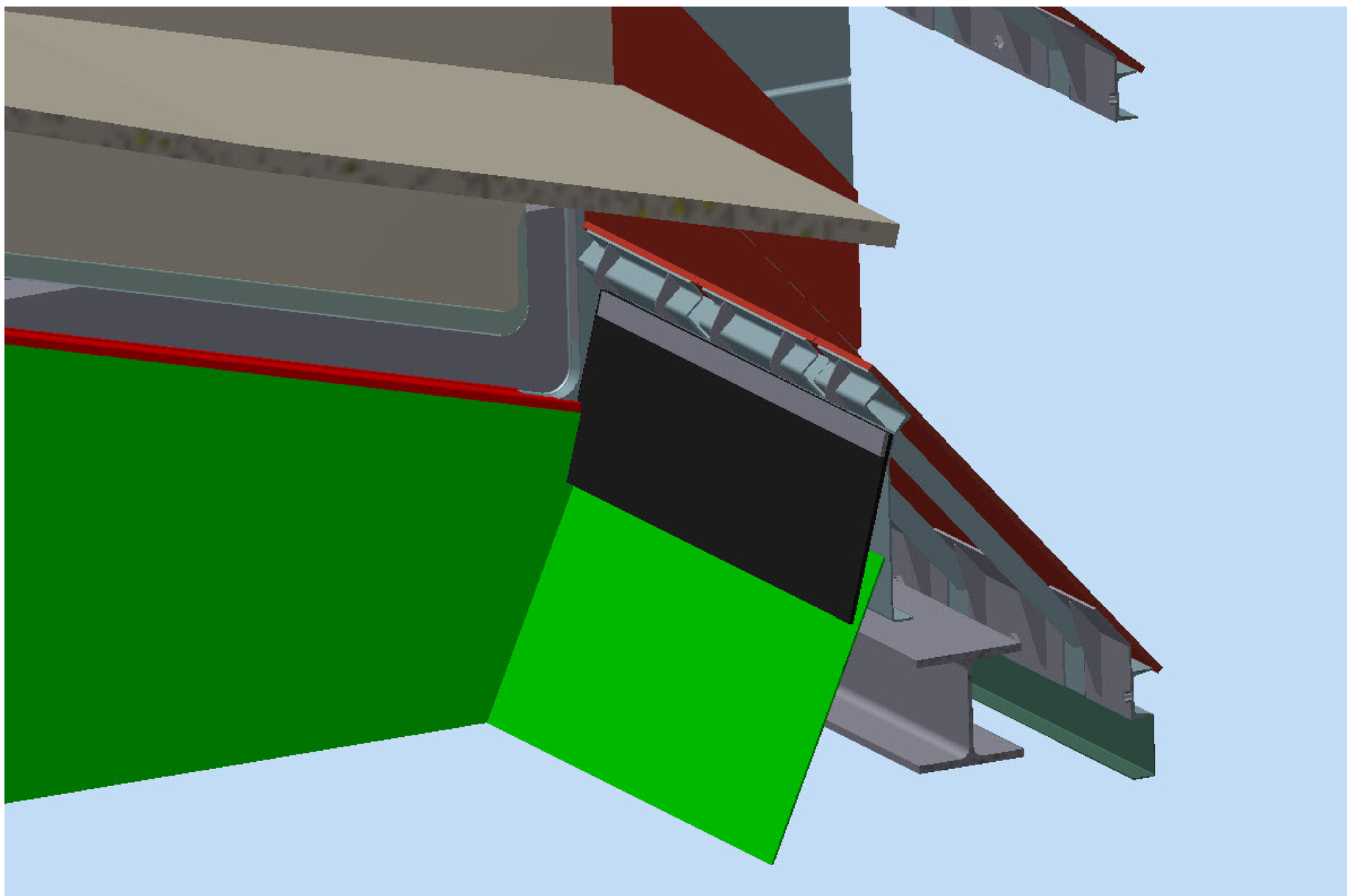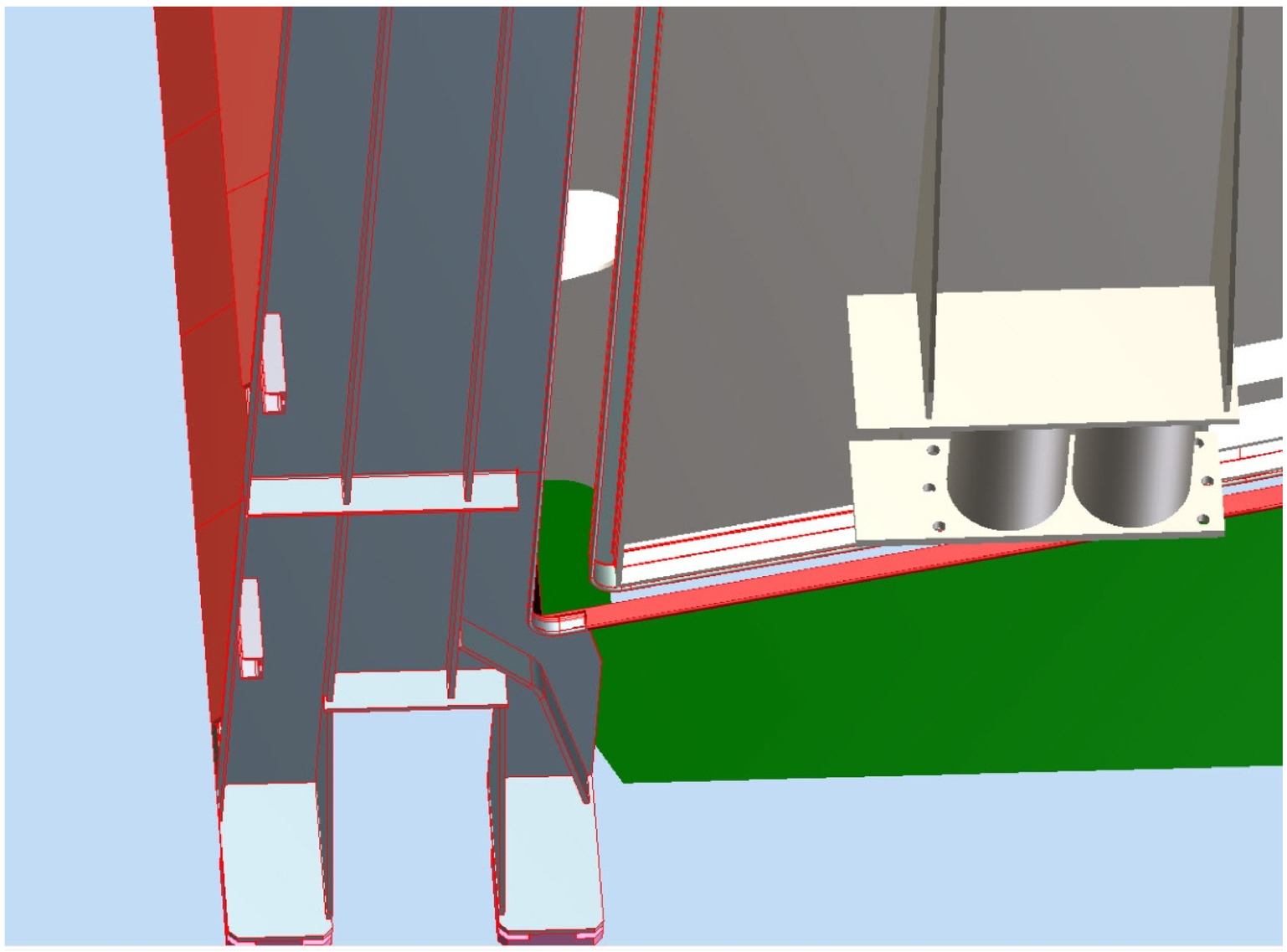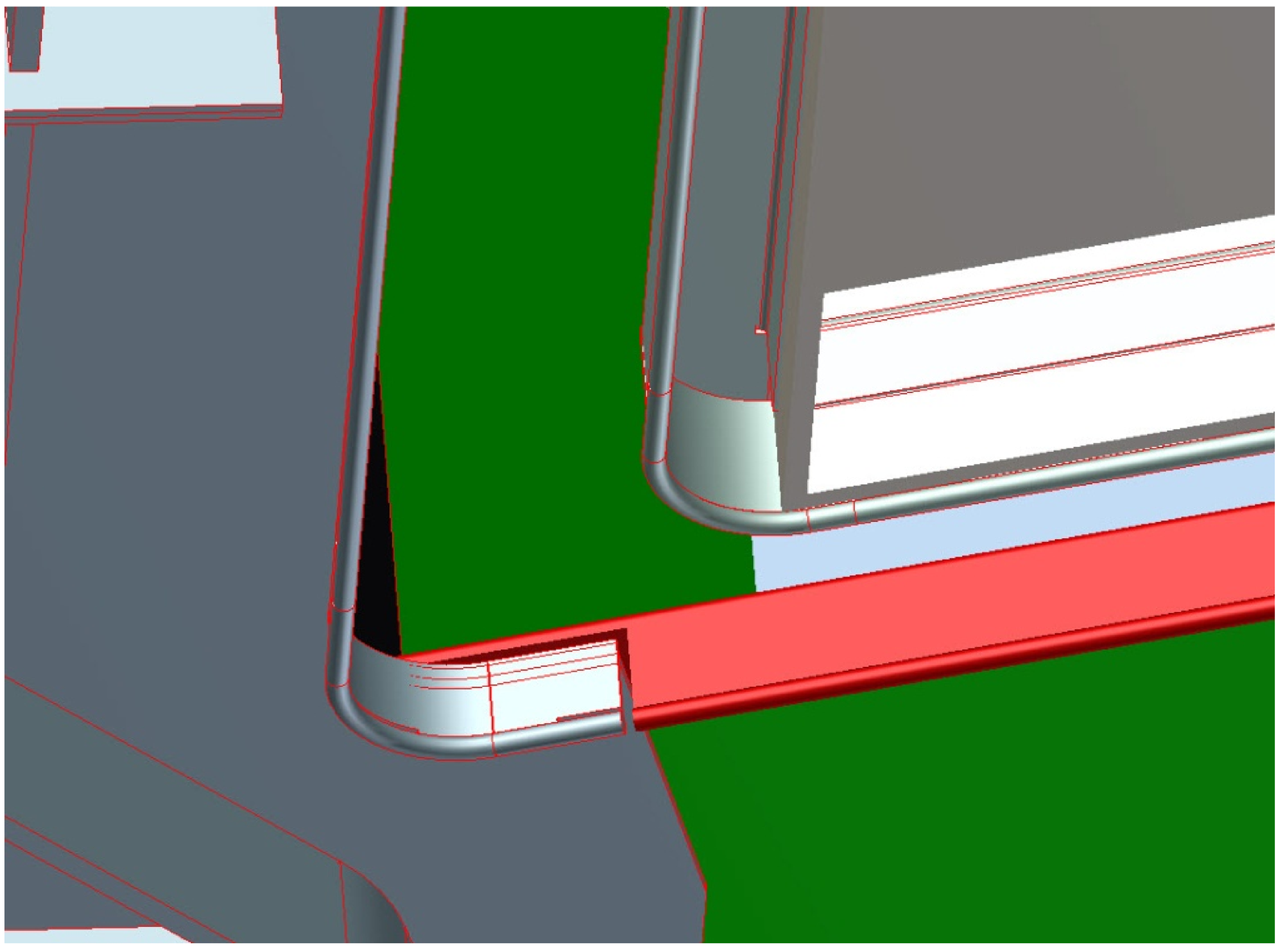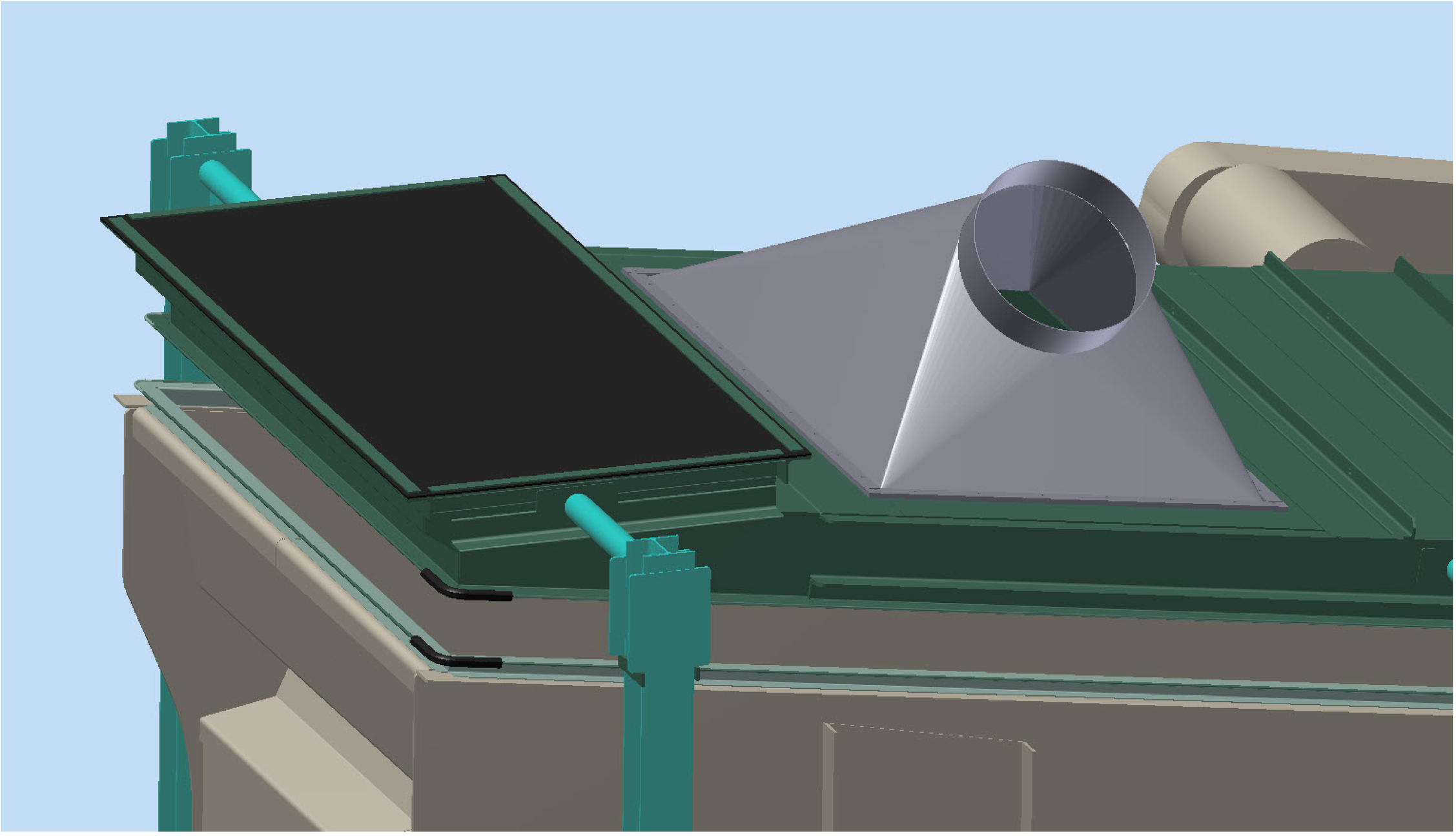
510-SN-1010
510-SN-1110
510-SN-2010
510-SN-2110
510-SN-2210
510-SN-2310